145 Hi Pressure BLDC Blower

Features
- High Speed Low Noise
- Minimal Temperature Rise
- High Pressure
- Hall Effect Sensors
- External Motor Driver
- Customizations Available

Application
- Respiration
- Air Bed
- Air Vest
- Fuel Cell Blower

Dimensions

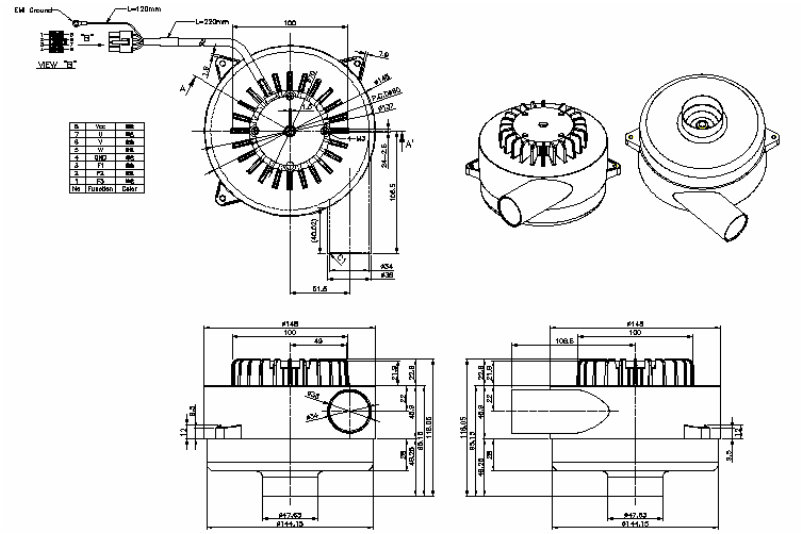

【Above dimensions & below data are for your ref only. For detailed info or customized requirements, you are very welcome to inquire.】

Model No.	Rated Voltage [V]	No-Load Speed [r/min]	No-Load Current [A]	Rated Speed [R.P.M.]	Rated Current [A]
PBD002-000	24	22000	2.4	18000	12
Model No.	**Output [Watt]**	**Rotating Direction [CW / CCW]**	**Pressure Maximum (Sealed Pressure) [CmH2O]**	**Flow Rate Maximum (Open Flow) [LPM]**	**Weight [kg]**
PBD-002-000	250	CCW	125	1600	1.60